THIS DRAWING/SPECIFICATION CONTAINS PROPRIETARY INFORMATION OF THE J.B NOTTINGHAM AND CO., INC.,/ DURALINE, WHICH SHALL NOT BE PUBLISHED, REPRODUCED, COPIED, FURTHER DISCLOSED AS THE BASIS OF MANUFACTURE FOR OR SALE OF APPARATUS TO OTHERS THAN THE J.B. NOTTINGHAM AND CO., INC., EXCEPT BY WRITTEN PERMISSION OF A DULY AUTHORIZED REPRESENTATIVE OF SAID COMPANY.

REVISIONS				
ZONE	LTR	DESCRIPTION	DATE	APPROVED

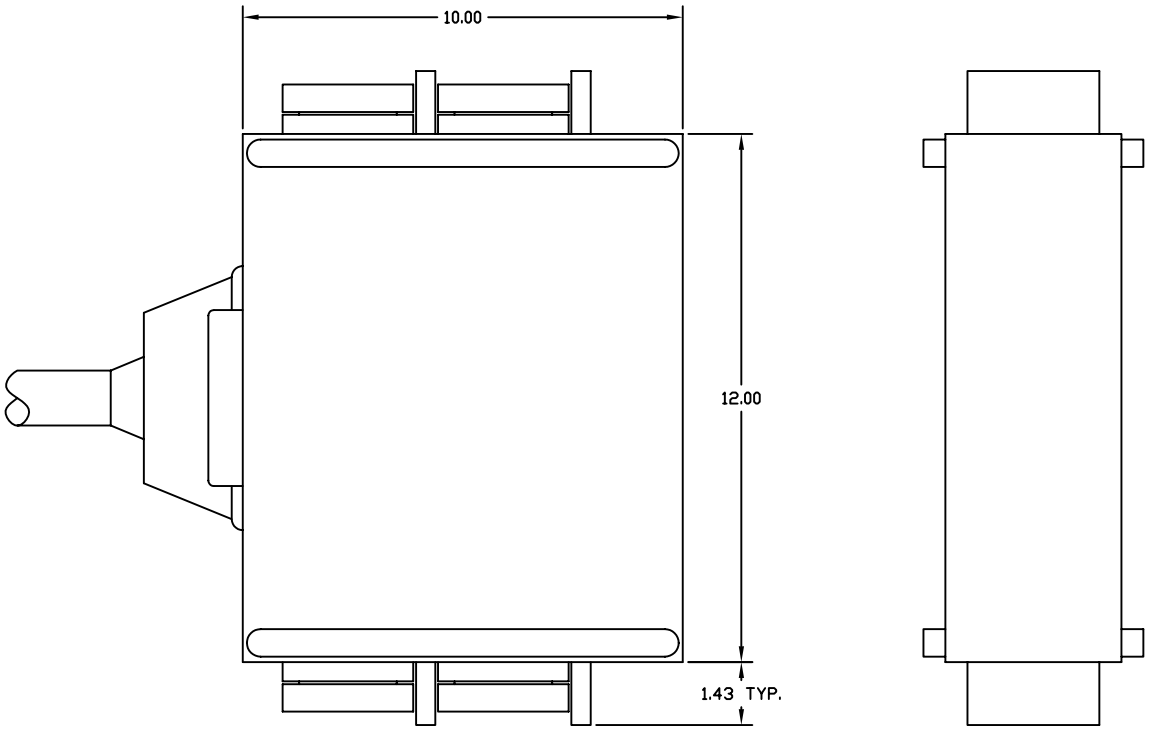

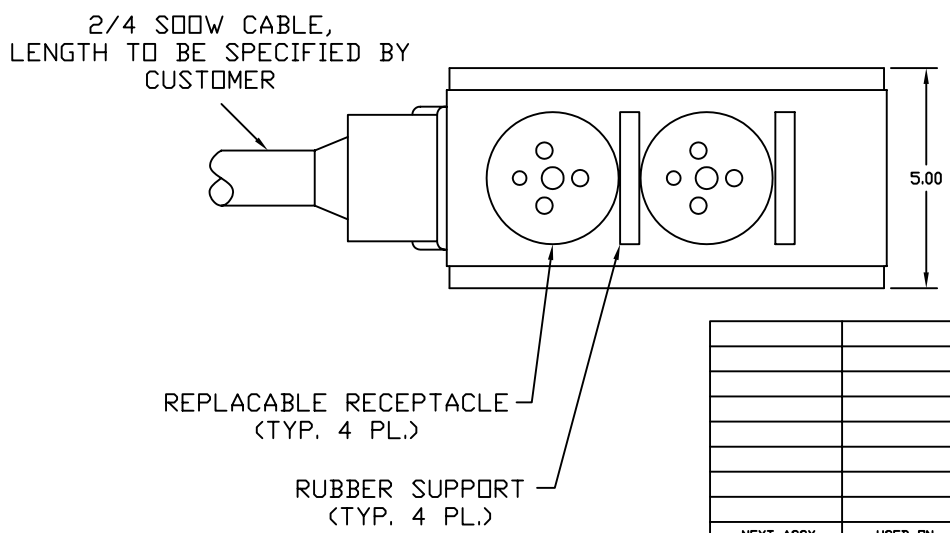

NEXT ASSY	USED ON
APPLICATION	

UNLESS OTHERWISE SPECIFIED DIMENSIONS ARE IN INCHES
TOLERANCES ON
FRACTIONS DECIMALS ANGLES

MATERIAL:

FINISH:

DRAWING STARTED		DATE
DRAWN	T.G.	9/26/83
CHECKED	D.R.	8/1/02
ENGR		

4P4SCRR 4 OUTLET DISTRIBUTION PANEL
WITH FOUR REPLACEABLE RECEPTACLES

Duraline
DIV. J.B. NOTTINGHAM
75 HOFFMAN LANE
ISLANDIA, NY 11749

SIZE	CODE IDENT NO.		REV.
C	16998	SM129500	
SCALE			SHEET