THIS DRAWING/SPECIFICATION CONTAINS PROPRIETARY INFORMATION OF THE J.B NOTTINGHAM AND CO., INC.,/ DURALINE, WHICH SHALL NOT BE PUBLISHED, REPRODUCED, COPIED, FURTHER DISCLOSED AS THE BASIS OF MANUFACTURE FOR OR SALE OF APPARATUS TO OTHERS THAN THE J.B. NOTTINGHAM AND CO., INC., EXCEPT BY WRITTEN PERMISSION OF A DULY AUTHORIZED REPRESENTATIVE OF SAID COMPANY.

REVISIONS				
ZONE	REV	DESCRIPTION	DATE	APPROVED

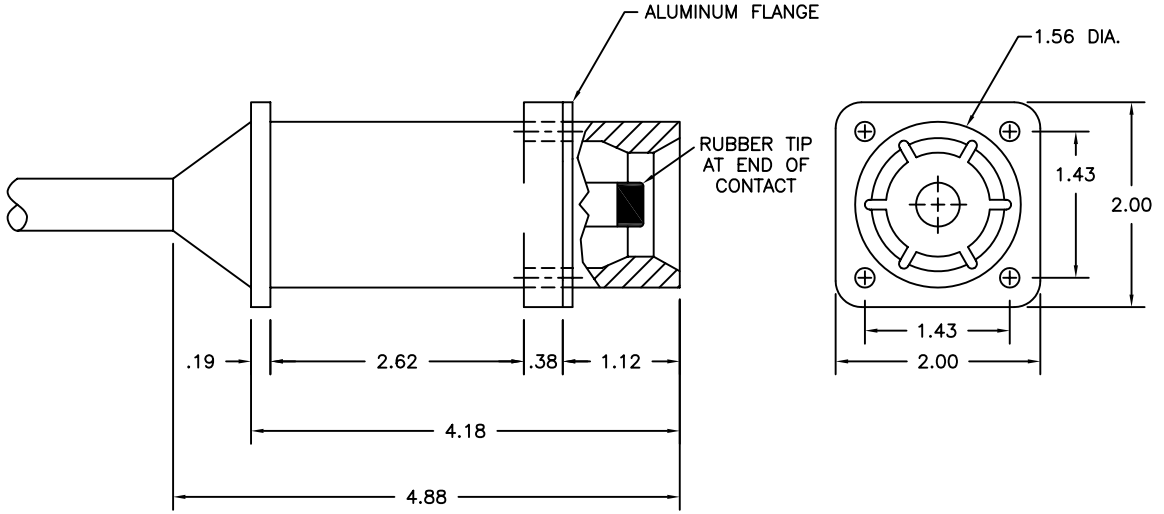

NOTE : 1) LOCKING RING MUST BE PRESENT ON MATING FEMALE PLUG ONLY.

DIMENSIONS IN INCHES UNLESS OTHERWISE NOTED. TOLERANCES: FRAC. DEC. ANG.			518 MICRO MALE RECEPTACLE
MATERIAL: BODY IS MOLDED HYPALON	APPROVALS	DATE	Duraline DIV. OF J.B. NOTTINGHAM 75 HOFFMAN LANE ISLANDIA, NY 11749
	DRAWN DR	11/12/03	
FINISH :	CHECKED		SIZE A / FSCM NO. 16998 / DWG. NO. 518MICROMALERECEPT / REV.
	ISSUED		
DO NOT SCALE DRAWING			SCALE / SHEET 1 OF 1